GBA *Global Bill Acceptors*

Product Bulletin

Space Envelope - 66mm NG, Up Stacker

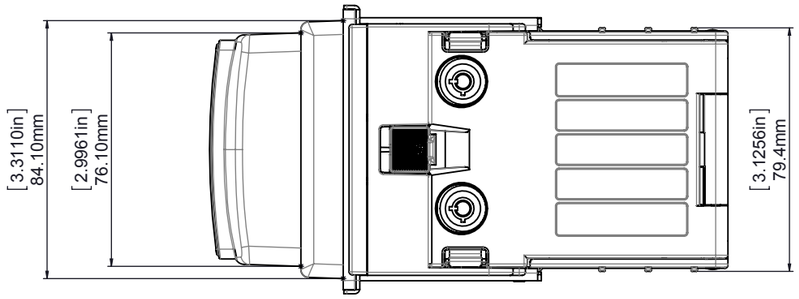

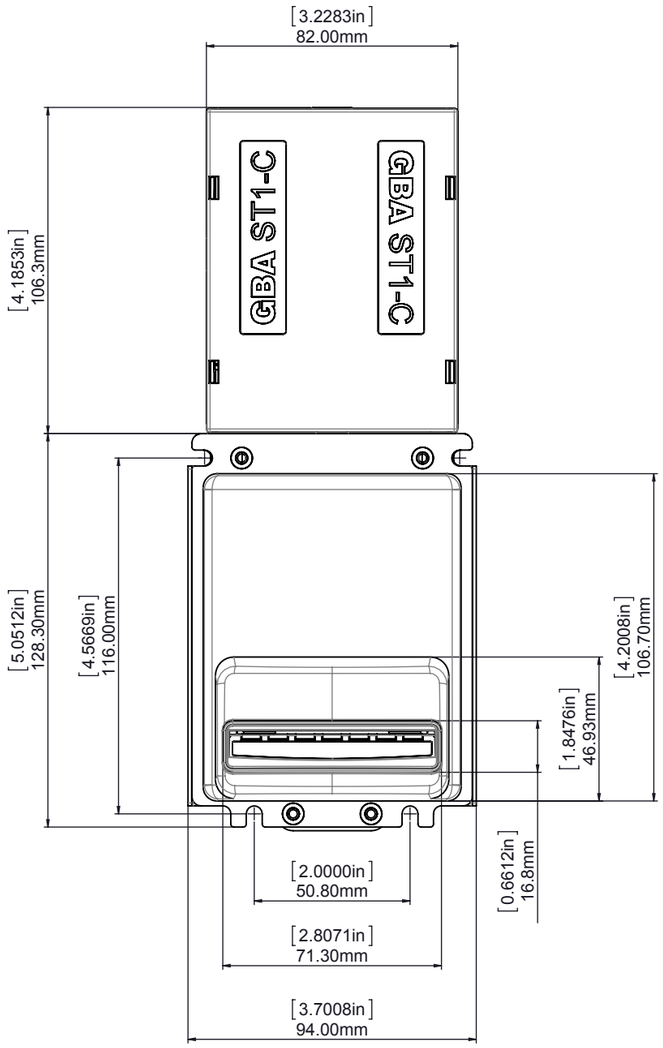

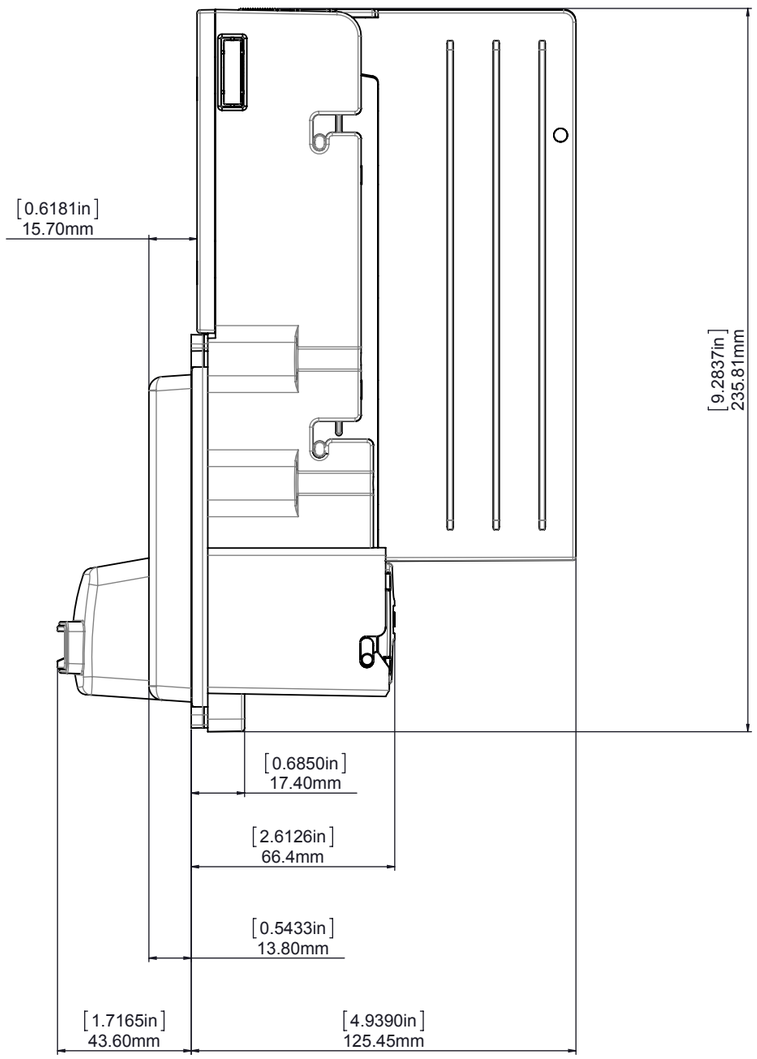

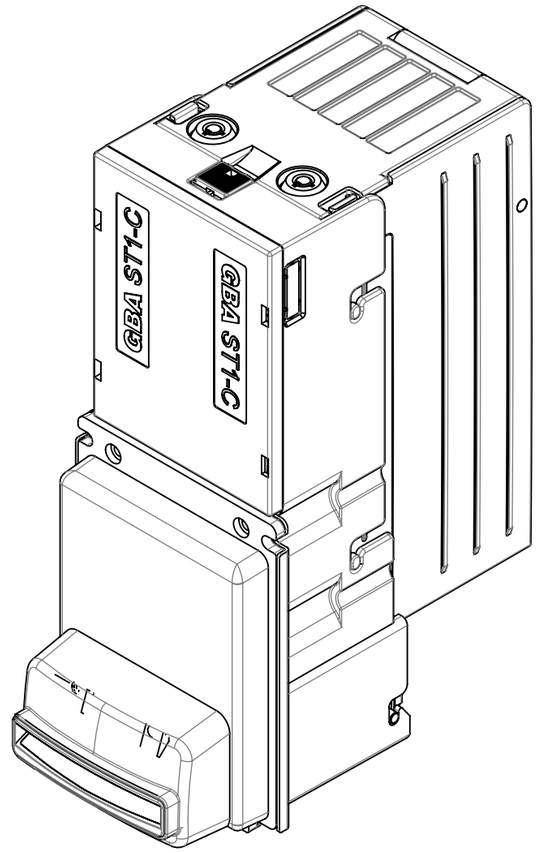

Ref File: ST1-C BILL RECOGNIZER ASSY.sldasm

This drawing is issued on the sole understanding that it is copyright and to be regarded as the confidential property of Astrosys International. It must not be used or reproduced without the prior written consent of the company.

Astrosys International Ltd

ST1-C BILL RECOGNIZER Space Envelope.slddrw
14 March 2013